DC130B-4 5-1/4" Classic Woofer Speaker 4 Ohm

DC130B-4

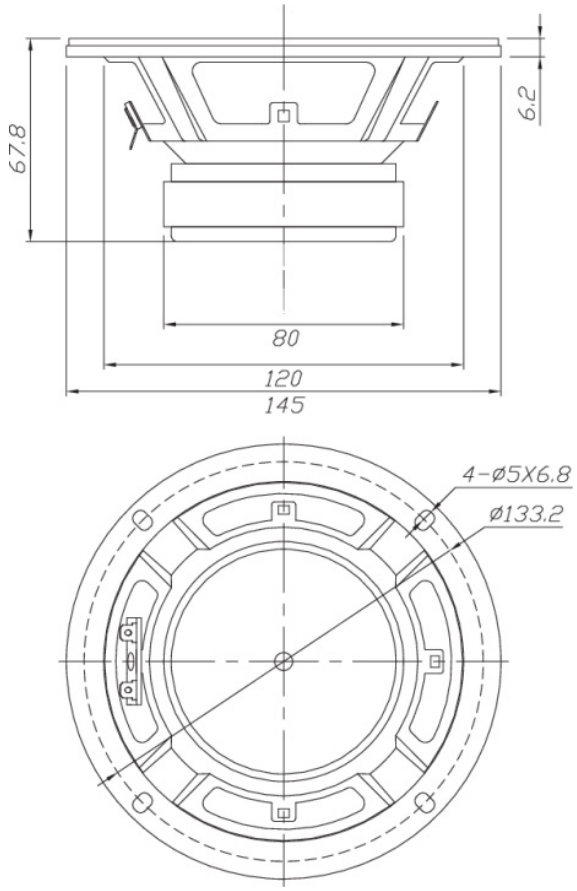

PARAMETERS

Impedance	4 ohms
Re	3.2 ohms
Le	0.5 mH @ 1 kHz
Fs	51.8 Hz
Qms	2.52
Qes	0.41
Qts	0.35
Mms	9.4g
Cms	1 mm/N
Sd	91.6 cm²
Vd	22.9 cm³
BL	4.89 Tm
Vas	12.3 liters
Xmax	2.5 mm
VC Diameter	25.4 mm
SPL	92.1 dB @ 2.83V/1m
RMS Power Handling	40 watts
Usable Frequency Range (Hz)	50 - 5,000 Hz

IMPEDANCE/PHASE

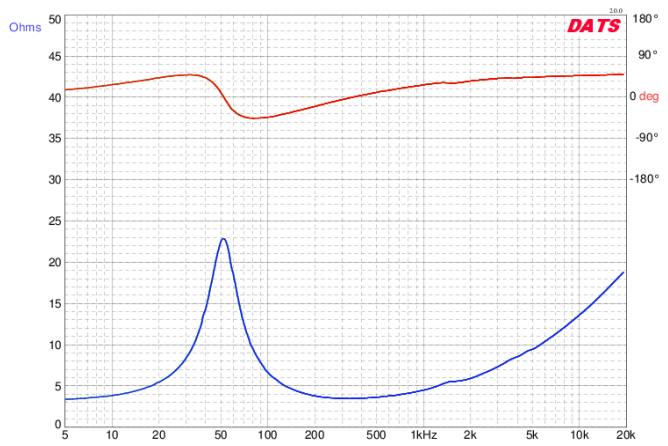

FEATURES

- Sturdy, easy-to-countersink round steel frame
- 4 ohm impedance offers alternative load possibilities
- Coated paper cone provides smooth response and reduced cone breakup
- Suitable for sealed or vented enclosures
- Large diameter flat spider and good Xmax for clean bass

FREQUENCY RESPONSE

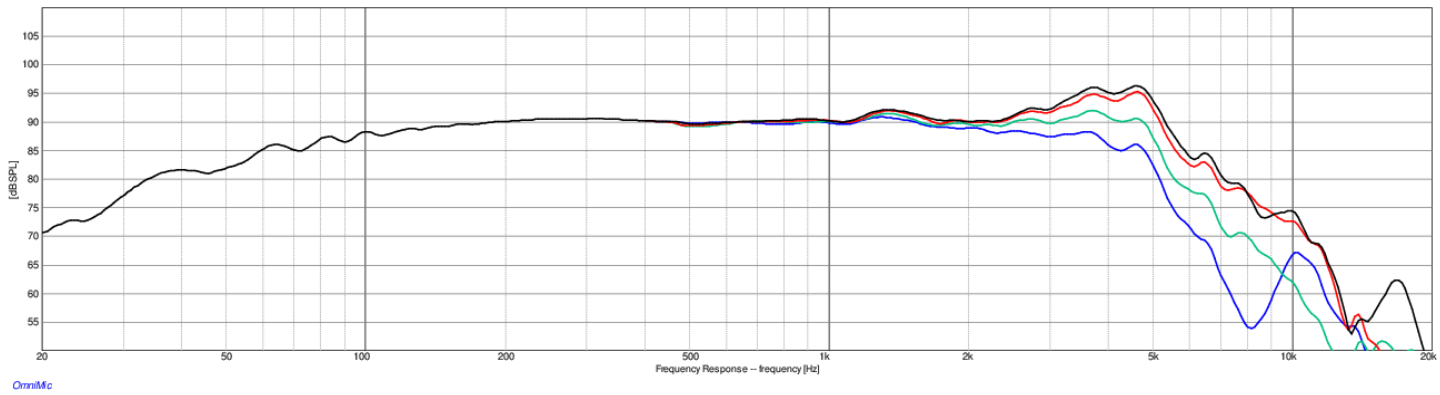

Note: 1/12th octave smoothing - nearfield response included in graph below 450 Hz.

Black = 0°
Red = 15°
Green = 30°
Blue = 45°