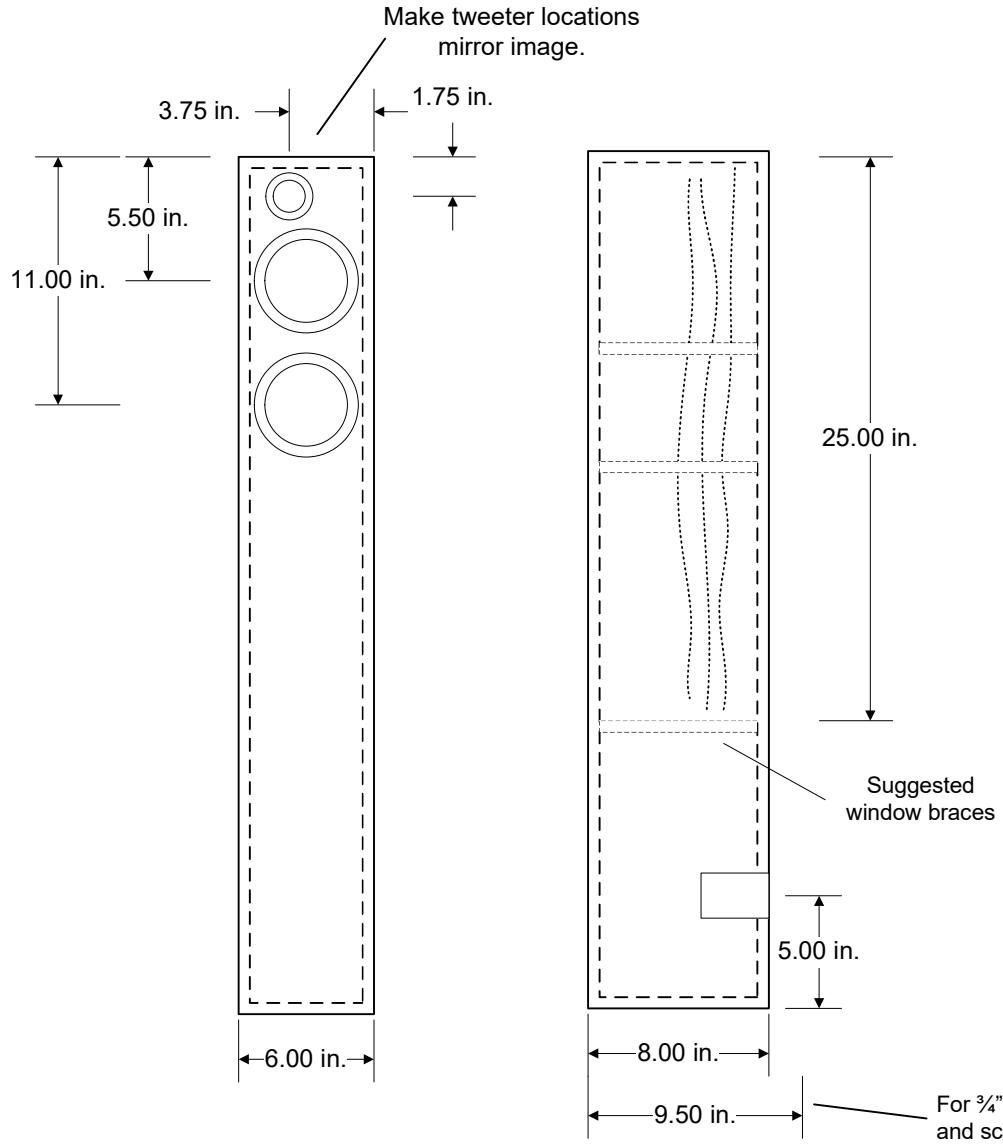

Tweeter Cut out:

T20-8
56mm outer dia.
36mm Inner,
3mm recess, notch out
For terminal

ND20FA
45mm outer dia
33mm inner

Woofer cut out:
117mm outer,
53 mm inner
3mm recess

Vent: Single Vent
2" dia x 3" L Can be front
mounted if prefered.

Cabinet fill: Dacron

Tweeter: T20-8 or ND20F8
Woofer: B4N
Cabinet material:
1/2" MDF

Terminal cut out as
required

Meniscus Audio Group. Inc.			
REV	Overnight Sensation TMM by Paul Carmody	3-28-03	APPROVED